CANGEO®
Advanced Attachment System

made by GIORGIO CANGINI

Roller

VIBRATORY ROLLER COMPACTOR



THE **VIBRATORY ROLLER**
THAT EXCEEDS EVERY
EXPECTATION **ON SITE.**

ADVANCED VERSION REV 2

FOR FAST AND EFFECTIVE COMPACTION.

- **REINFORCED HIGH-RESISTANCE STRUCTURE**
  Designed to withstand heavy mechanical stress, reducing wear, downtime and maintenance costs.
- **HIGH PRODUCTIVITY EVEN ON DIFFICULT TERRAIN**
  Ensures uniform shredding and consistent performance even in demanding operating conditions.
- **IDEAL FOR PUBLIC GREEN AREAS, LAND CLEARING AND FORESTRY WORK**
  A versatile solution for routine maintenance, green area management and operations in dense vegetation.

Premium Line



Roller

VIBRATORY ROLLER COMPACTOR

SMOOTH DRUM ROLLER

High-performance vibrating roller used to compact materials such as asphalt, soil, gravel and crushed stone, which form the base layer of the road surface.



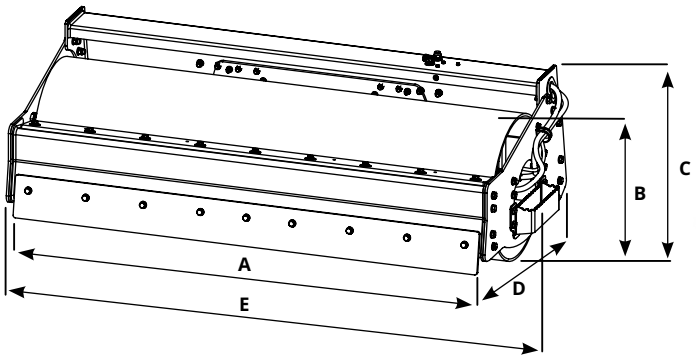

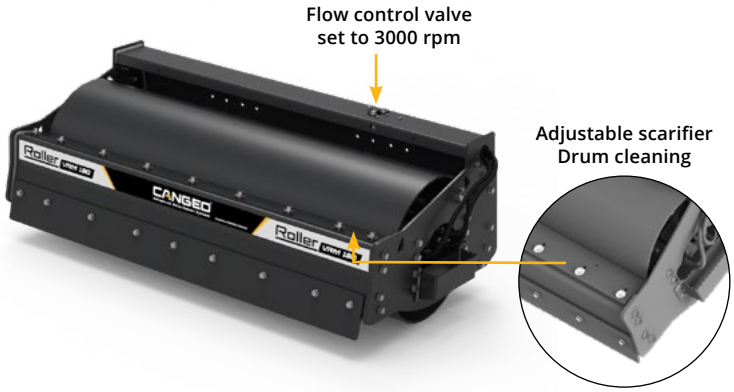

ROLLER VRM	VRM 120			VRM 140			VRM 160			VRM 180			VRM 200		
A (mm)	1200			1400			1600			1800			2000		
B (mm)	560			560			610			610			610		
C (mm)	605			605			700			700			700		
D (mm)	860			860			970			970			970		
E (mm)	1422			1622			1785			1985			2185		
Without coupling weight Kg	420			460			750			810			880		
Pressure MIN. / MAX. (BAR)	180 / 220			180 / 220			180 / 220			180 / 220			180 / 220		
Engine (CC)	11			11			17			17			17		
Hydraulic Fluid Flow Rate (L/Min')	24	27	33	24	27	33	37	43	51	37	43	51	37	43	51
Rev/min (RPM)	2200	2500	3000	2200	2500	3000	2200	2500	3000	2200	2500	3000	2200	2500	3000
Vibration frequency (HERTZ)	37	42	50	37	42	50	37	42	50	37	42	50	37	42	50
Centrifugal force (kN)	7	9	12	9	11	15	10	13	18	10	13	18	14	17	24

The data provided should be considered indicative and should be compared with the capacity of the operating machine on which the equipment is used

HOME

Roller

VIBRATORY ROLLER COMPACTOR

PADFOOT DRUM ROLLER

High-performance vibrating roller particularly suitable for compacting backfill materials and for the construction of unpaved roads.



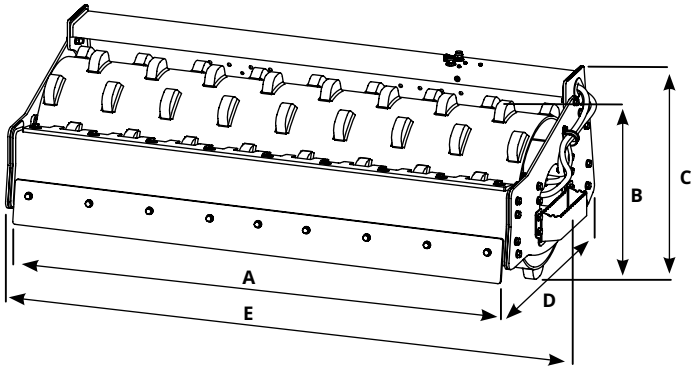

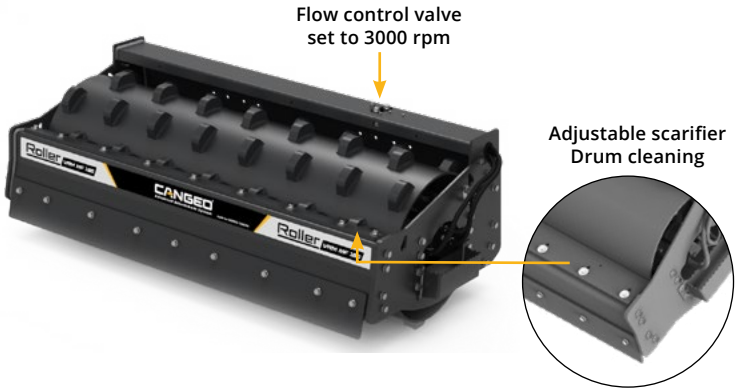

MODEL	VRM MF 160			VRM MF 180			VRM MF 200		
A (mm)	1600			1800			2000		
B (mm)	750			750			750		
C (mm)	700			700			700		
D (mm)	970			970			970		
E (mm)	1785			1985			2185		
Without coupling weight Kg	870			950			1035		
Teeth number	65			75			85		
Pressure MIN. / MAX. (BAR)	180 / 220			180 / 220			180 / 220		
Engine (CC)	17			17			17		
Hydraulic Fluid Flow Rate (L/Min')	37	43	51	37	43	51	37	43	51
Rev/min (RPM)	2200	2500	3000	2200	2500	3000	2200	2500	3000
Vibration frequency (HERTZ)	37	42	50	37	42	50	37	42	50
Centrifugal force (kN)	10	13	18	10	13	18	14	17	24

The data provided should be considered indicative and should be compared with the capacity of the operating machine on which the equipment is used

OPT ROLLER

OPTIONAL ROLLER VRM / VRM MF

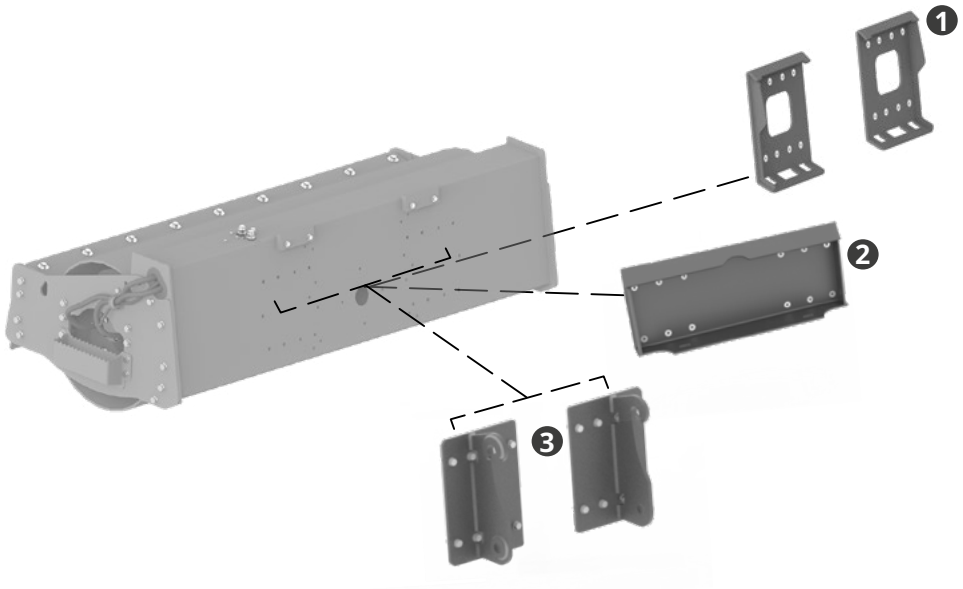

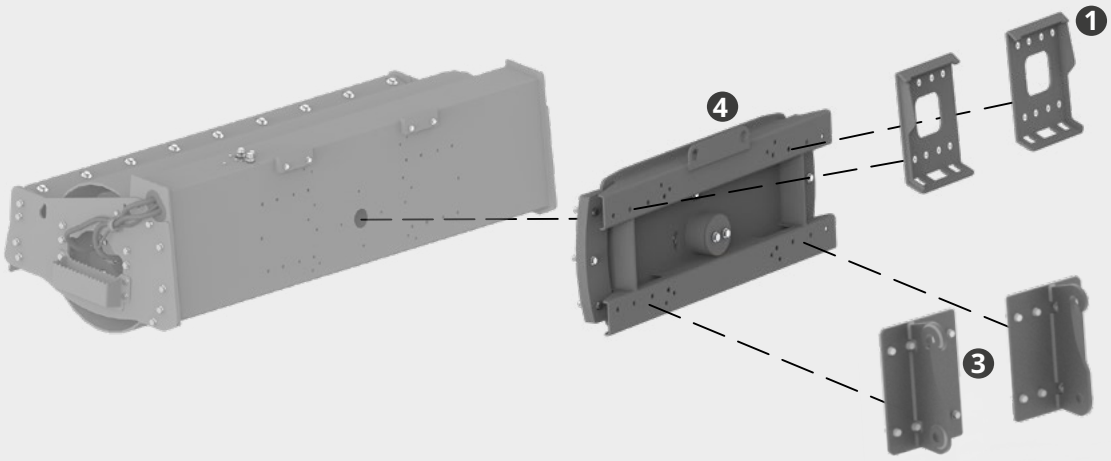

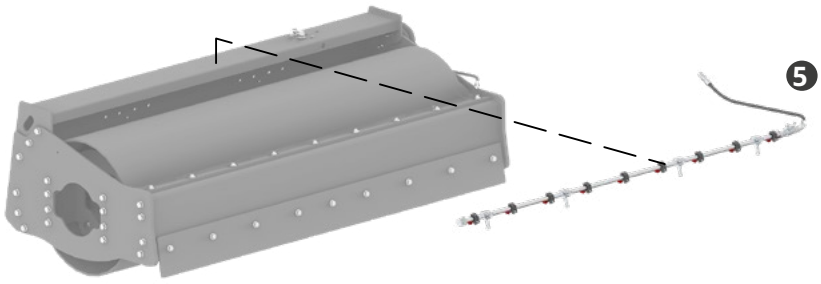

	Model	Weight Kg	Model. ROLLER
1	FRONT-MOUNTED ATTACHMENT SKID LOADER	29	VRM 120
2	FRONT-MOUNTED ATTACHMENT MINI SKID LOADER	13	VRM 120 - VRM 140 - VRM160 - VRM180 - VRM200
3	WHEEL LOADER ATTACHMENT	31	VRM 120 - VRM 140 - VRM160 - VRM180 - VRM200
4	OPTIONAL FLOATING MOUNT +7° / -7°	115	VRM160 - VRM180 - VRM200
5	SPRAY NOZZLE BAR KIT	/	VRM 120 - VRM 140 - VRM160 - VRM180 - VRM200

The data provided should be considered indicative and should be compared with the capacity of the operating machine on which the equipment is used

HOME


Roller VRM 180
CANGEO
Advanced Attachment System
Roller VRM 180