GRAPPLE - WOOD GRAPPLE WITH BELL

Designed for vibrodriving and extracting wooden, concrete and steel posts.

Suitable for landslide containment, embankments and riverbanks.

Ideal for the construction of vineyards, orchards and fencing systems.

A fundamental combination, widely used in land maintenance and agriculture





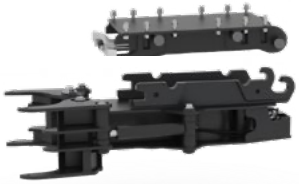

GRAPPLE with directly welded TOK ADAPTER





By means of the MACHINE COUPLINGS the GRAPPLE can be mounted directly on the machine without drive.



OPTIONAL POST EXTRACTION KIT Recommended for use to protect the anti-vibration mounts.

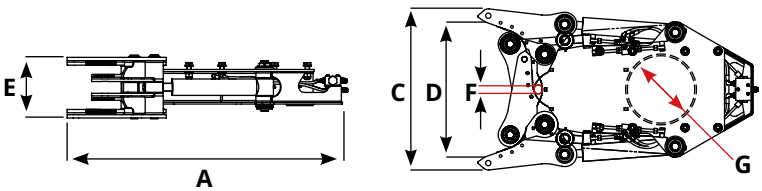

Model	#	A mm	B mm	C mm	D mm	E mm	Ø F mm	Ø G mm	Hydraulic Flow (L/Min')		Kg.	Model. PLURY
GRAPPLE	A	835	500	575	375	220	35	200	10	58 kN	83	W1 14
GRAPPLE	B	945	500	575	375	220	35	200	10	58 kN	86	W1 25
GRAPPLE	C	1055	540	605	415	225	35	250	10	83 kN	110	W1 45
GRAPPLE	D+F	1260	620	735	613	290	40	300	10	95 kN	200	W1 60 - W2 62
GRAPPLE	E+G	1325	620	735	613	290	40	300	10	95 KN	225	W1 90 - W2 92
GRAPPLE	H+I+L	1620	690	835	675	400	70	350	10	103 kN	355	W2 125 - W2 185 W2 220

The data provided should be considered indicative and should be compared with the capacity of the operating machine on which the equipment is used

HOME

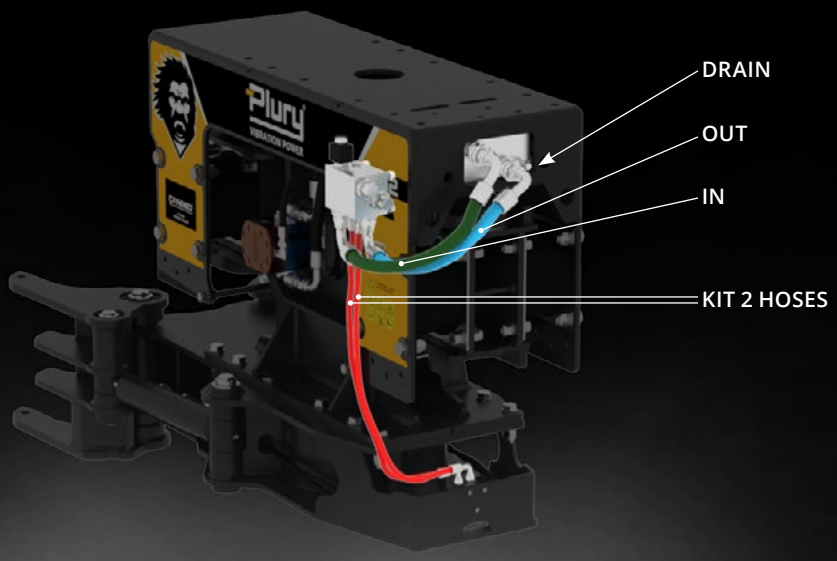

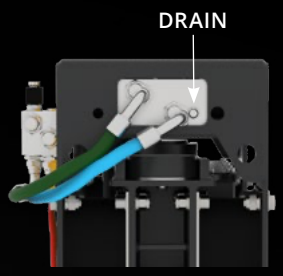

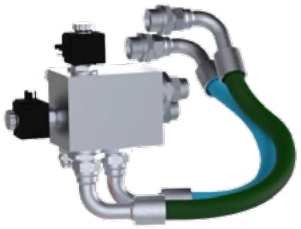

HYDRAULIC KITS	#	Model. PLURY	CABLE COIL	Volt
2-HOSES VALVE KIT FOR GRAPPLE	A	W1 14	C030401013 C030401014	V12 V24
2-HOSES VALVE KIT FOR GRAPPLE	B	W1 25	C030401013 C030401014	V12 V24
2-HOSES VALVE KIT FOR GRAPPLE	C	W1 45	C030401013 C030401014	V12 V24
2-HOSES VALVE KIT FOR GRAPPLE	D + F	W1 60 - W2 62	C030401013 C030401014	V12 V24
2-HOSES VALVE KIT FOR GRAPPLE	E + G	W1 90 - W2 92	C030401013 C030401014	V12 V24
2-HOSES VALVE KIT FOR GRAPPLE	H + I + L	W2 125 - W2 185 W2 220	C030401013 C030401014	V12 V24



HYDRAULIC KITS	#	Model. PLURY
2 HOSES GRAPPLE	A + B + C	W1 14
2 HOSES GRAPPLE	D + F	W1 25
2 HOSES GRAPPLE	E + G	W1 45
2 HOSES GRAPPLE	H + I + L	W1 60 - W2 62



ELECTRIC KIT
ELECTRIC KIT 1,5mt + 3mt
ELECTRIC KIT 1,5mt + 5mt
ELECTRIC KIT 1,5mt + 12mt

The data provided should be considered indicative and should be compared with the capacity of the operating machine on which the equipment is used

OPT GRAPPLE KIT
OPTIONAL CONCRETE-STEEL

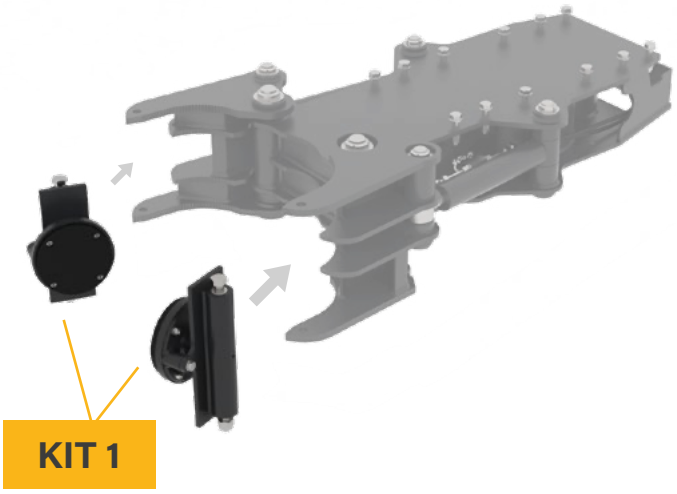



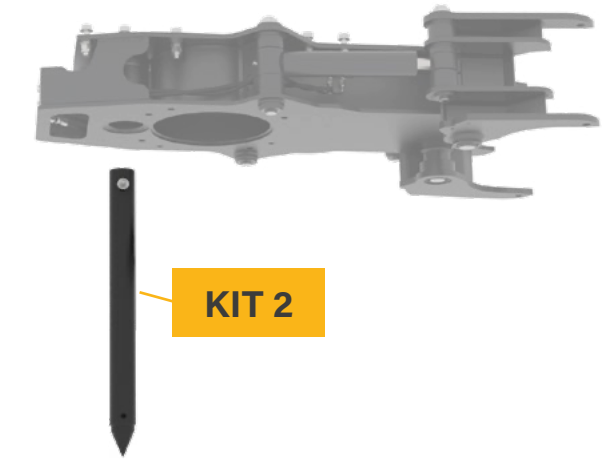



KIT 1

Grapple accessory suitable for vibro-driving and extraction of concrete and steel poles.

Model	#	Kg.
KIT 1 CONCRETE PADS	A + B + C	27
KIT 1 CONCRETE PADS	D + E + F + G	40
KIT 1 CONCRETE PADS	H + I + L	51

KIT 2

Pre-hole drill suitable for making a pre-hole in hard ground
Suitable for vibro-driving concrete poles

Model	#	Kg.
KIT 2 T-DRILLING	A + B + C	22
KIT 2 T-DRILLING	D + E + F + G	27
KIT 2 T-DRILLING	H + I + L	37

The data provided should be considered indicative and should be compared with the capacity of the operating machine on which the equipment is used

HOME

OPT GRAPPLE KIT
OPTIONAL CONCRETE-STEEL

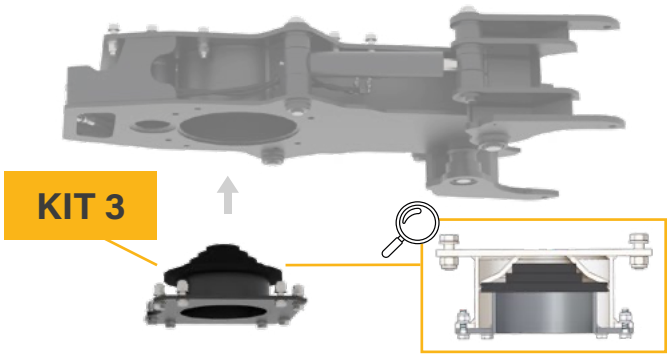

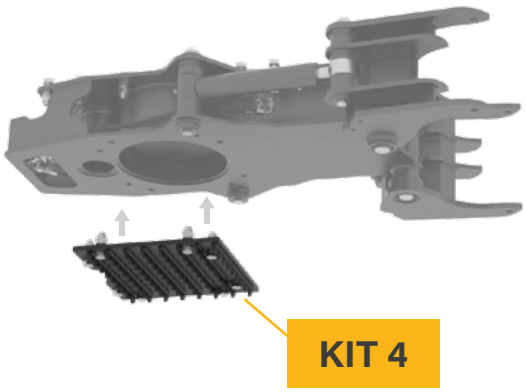





KIT 3

Shock-absorbing rubber accessory suitable for vibrating concrete poles, avoiding damage to the pole itself

Model	#	Kg.
KIT 3 BELL	A + B	6
KIT 3 BELL	C	7,5
KIT 3 BELL	D + E + F + G	11
KIT 3 BELL	H + I + L	15,5

Model	#
KIT RUBBER	A + B
KIT RUBBER	C
KIT RUBBER	D + E + F + G
KIT RUBBER	H + I + L



Replacement rubber pad for centering bell

KIT 4

Toothed plate mounted in place of the bell for vibratory driving of wooden piles of different diameters

Model	#	Kg.
KIT 4 TOOTHED PLATE	B	8
KIT 4 TOOTHED PLATE	C	11
KIT 4 TOOTHED PLATE	D + E + F + G	25
KIT 4 TOOTHED PLATE	H + I + L	33