T-PLATE - NARROW PLATE - SINGLE SLED

Ideal for compaction work in narrow trenches.

Allows the shoe to reach deep into the trench.

Particularly suitable for laying fibre optic cables and underground utilities.







T-Plate with TOK adapter welded directly onto the plate.



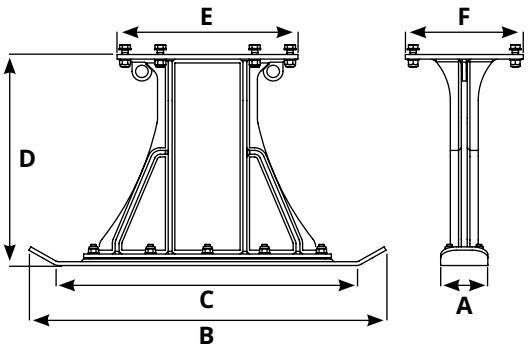

Cod.	Model	#	A mm	B mm	C mm	D mm	E mm	F mm	Kg.	Model. PLURY
HSR0101001	**T-PLATE 100**	A	100	685	570	450	340	230	34	W1 14
HSR0101002	**T-PLATE 150**	A	150	685	570	450	340	230	37	W1 14
HSR0201001	**T-PLATE 120**	B	120	910	755	550	400	240	61	W1 25
HSR0201002	**T-PLATE 150**	B	150	910	755	550	400	240	64	W1 25
HSR0201003	**T-PLATE 200**	B	200	910	755	550	400	240	67	W1 25
HSR0301001	**T-PLATE 120**	C	120	910	755	550	400	240	65	W1 45
HSR0301002	**T-PLATE 150**	C	150	910	755	550	400	240	67	W1 45
HSR0301003	**T-PLATE 200**	C	200	910	755	550	400	240	71	W1 45
HSR0401001	**T-PLATE 135**	D+E+F+G	135	1155	985	700	600	400	138	W1 60 - W1 90 - W2 62 - W2 92
HSR0401002	**T-PLATE 200**	D+E+F+G	200	1155	985	700	600	400	145	W1 60 - W1 90 - W2 62 - W2 92
HSR0501001	**T-PLATE 135**	H+I+L	135	1220	1030	710	820	400	170	W2 125 - W2 185 - W2 220
HSR0501002	**T-PLATE 200**	H+I+L	200	1220	1030	710	820	400	180	W2 125 - W2 185 - W2 220

The data provided should be considered indicative and should be compared with the capacity of the operating machine on which the equipment is used

HOME