SHEET PILE CLAMP

SHEET PILE VIBRO-DRIVING CLAMP

Clamp designed for vibro-driving and extracting sheet piles in various soil conditions.

Ideal for vibrating steel cages immersed in concrete.





Sheet pile clamp with TOK adapter welded directly onto the clamp.

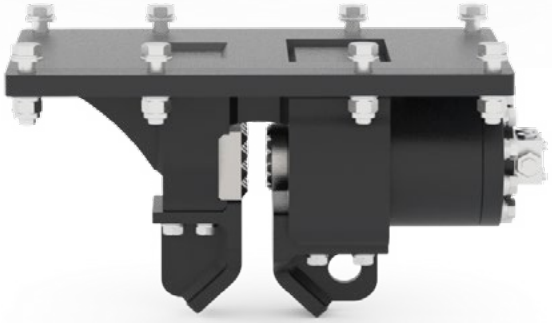



OPTIONAL FOR PILE EXTRACTION
Recommended to protect the anti-vibration mounts.

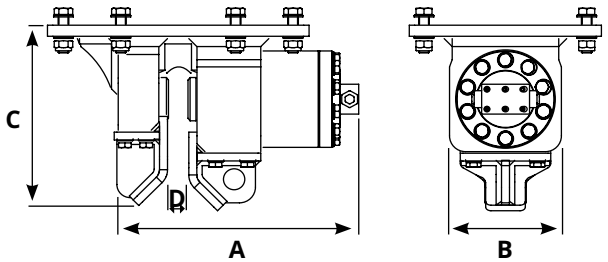

Model	#	A mm	B mm	C mm	D mm	Press. Bar	Force max press	Hydraulic Flow (L/Min')	Kg.	Model. PLURY
SHEET PILE CLAMP 25 GRIP	D+E+F+G H+I+L	455	210	350	25	200 ---------- 250	23 Ton --------- 28 Ton	10	170	W1 60 - W1 90 W2 62 - W2 92 W2 125 - W2 185 - W2 220

The data provided should be considered indicative and should be compared with the capacity of the operating machine on which the equipment is used

HOME