ONE WHEEL SMOOTH

Ideal for compaction work in narrow trenches.

Allows the wheel to reach deep into the trench.

Particularly suitable for laying fibre optic cables and underground utilities.





Single smooth wheel with directly welded TOK adapter.





Thanks to the machine couplings, the ONE WHEEL can be mounted directly onto the operating machine without requiring a vibration power unit.

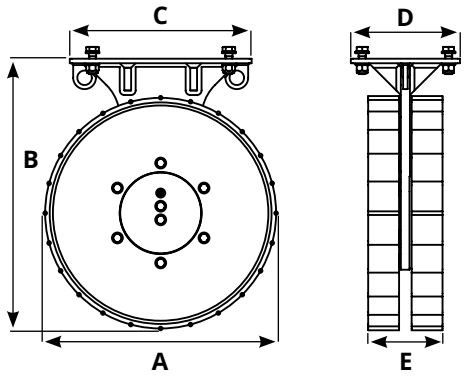

Model	#	A mm	B mm	C mm	D mm	E mm	Kg.	Model. PLURY
ONE WHEEL SM 160	A	505	595	400	240	160	93	W1 14
ONE WHEEL SM 160	B	505	595	400	240	160	93	W1 25
ONE WHEEL SM 160	C	610	690	460	300	160	115	W1 45
ONE WHEEL SM 220	D+E+F+G	710	840	600	400	220	205	W1 60 - W1 90 W2 62 - W2 92
ONE WHEEL SM 270	D+E+F+G	710	840	600	400	270	215	W1 60 - W1 90 W2 62 - W2 92
ONE WHEEL SM 220	H+I+L	810	970	820	400	220	250	W2 125 - W2 185 - W2 220
ONE WHEEL SM 270	H+I+L	810	970	820	400	270	265	W2 125 - W2 185 - W2 220

The data provided should be considered indicative and should be compared with the capacity of the operating machine on which the equipment is used